savaria™

Telecab

Residential Elevator

OWNER'S MANUAL

(To Be Retained by Owner After Installation
by Authorized Savaria Dealer)

Part No. 000627
03-m06-2011

IMPORTANT

Ensure that only an authorized Savaria Dealer installs and services the Telecab Residential Elevator. Under no circumstances is anyone other than a dealer with Savaria training and authorization to install, adjust, service or modify any mechanical or electrical device on this equipment. Failure to follow this warning can result in safety system compromises or defeat; this can result in serious injury or death. Savaria accepts no liability for property damage, warranty claims or personal injury, including death, in this circumstance.

Passenger safety is the result of countless details in the equipment's design, manufacture, and installation. After installation, reliable operation and continual safe operation requires regular service and inspection at least twice per year, or more frequently where usage, environment, or local jurisdiction requires. As the Owner, you are responsible for ensuring that regular service and inspections occur in a timely manner.

Refer to this manual for specifications, operating instructions and maintenance of the Telecab Residential Elevator.

Upon completion of installation, the dealer must provide you with the following information and ensure it is recorded in this manual. In addition, either the dealer or you must keep any service and/or maintenance records in the Maintenance Record section of this manual.

WARRANTY

Ensure your Savaria Dealer provides you with a copy of the manufacturer's limited parts warranty and documentation relating to any Dealer labour warranty.

FOR OWNER'S RECORDS

Customer Name: _____

Installing Dealer: _____

Dealer's Telephone Number: _____

Date Installed: _____

Serial/Job Number: _____

Table of Contents

TO ENSURE SAFE OPERATION 4
1. DESCRIPTION 5
2. GENERAL SPECIFICATIONS 6
3. OPERATION 8
Operating from the COP Controls 8
Operating from the Landing Station Controls 9
4. SAFETY FEATURES 10
Safety Underpan and Floor Plug Sensors 10
Door Lock and Open Door Sensor 10
Safety Brake 11
Emergency Stop Button 11
Manual Lowering and Battery Lowering System 12
5. MAINTENANCE 13
Maintenance Schedule 13
Maintenance Record 14
Operator Troubleshooting 15

TO ENSURE SAFE OPERATION

To ensure safe operation of this equipment, pay careful attention to the important notes below.

- Read this manual carefully before using the Telecab Residential Elevator.
- To prevent accidents, adhere strictly to the instructions and keep clear of moving parts at all times.
- Follow instructions on all equipment labels at all times. Replace any damaged labels immediately.
- Ensure that only qualified personnel perform maintenance.

1. DESCRIPTION

Figure 1 shows the exterior components of the Telecab.

Figure 1

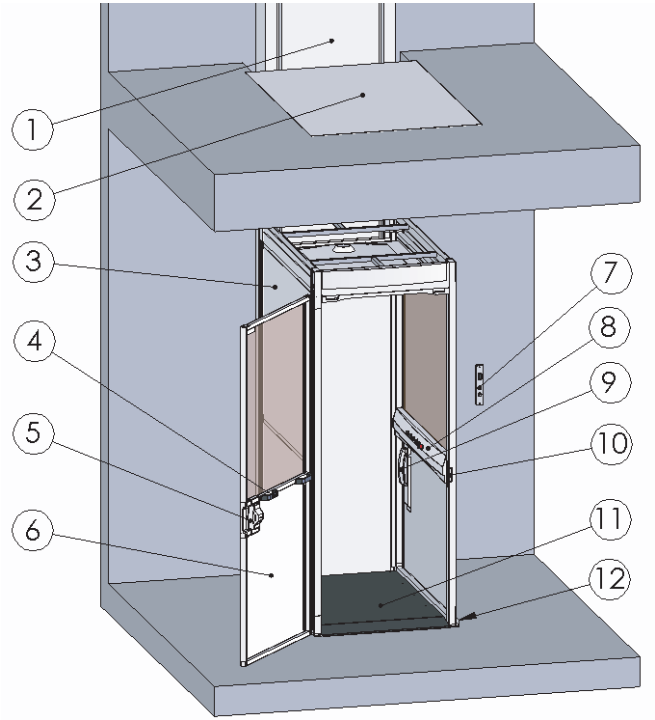

No.	Description	No.	Description
1	Tower	7	Hall station (call/send)
2	Floor plug	8	Car operating panel (COP)
3	Cab	9	Emergency telephone
4	Door handles	10	Electromechanical door lock
5	Door latch	11	Non-skid platform
6	Cab door	12	Safety underpan

2. GENERAL SPECIFICATIONS

Telecab Specifications

Load capacity	500 lbs. (227 kg)
Maximum travel	23 ft (7.0 m)
Travel speed	20 ft/min (0.1 m/s)
Tower	Modular 8 ft (2.4 m) base guide rail assembly Roller guide support
Control system	115 VAC relay logic operation 115 VAC up direction and 12 VDC down direction
Levels serviced	2 levels
Platform	Non-skid platform
Power supply (circuit supplied by others)	110 VAC, 20 A, 60 Hz, single phase
Lighting supply (circuit supplied by others)	120 volt, 60 Hz, single phase
Motor/pump	110 VAC, 1.5 HP screw type
Electrical	Automatic battery recharging system (115 VAC) Low voltage controls
Drive system	2:1 roller chain hydraulic
Temperature operating range	–10 °C to +40 °C (14 °F to 104 °F)
Cab access	Front access only (standard) Left or right access (optional); with optional 2-door access
Cab sizes	Standard: W30″ x L46″ (762 mm x 1168 mm) Optional: W32″ x L53″ (813 mm x 1346 mm) Optional: W30″ x L47″ (762 mm x 1194 mm) Optional: W32″ x L54″ (813 mm x 1372 mm)
Hall calls	Continuous pressure directional push buttons Keyed call/send

Color and finish	Beige or white electrostatic powder coat Clear or bronze acrylic windows
Safety features	Adjustable top floor presence detector built into the cab Electromechanical door lock and open door sensor Underpan safety sensor Emergency stop and alarm Emergency battery lowering Manual emergency lowering Fully-enclosed drive tower Pressure relief valve to prevent platform overload Slack chain safety device Two halogen lights in cab Telephone in cab
Optional equipment	Battery operation in up and down directions Two door concept (left/right access) Custom cab size Custom color Hydraulic door closer Automatic door operator

3. OPERATION

Operating from the COP Controls

Figure 2 shows the car operating panel (COP) controls.

Figure 2

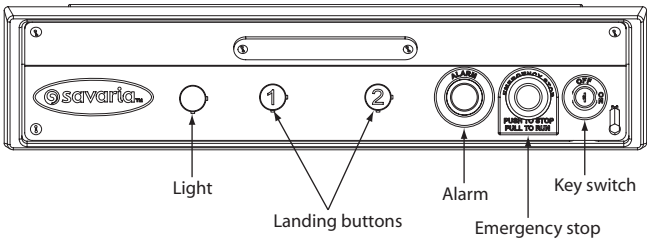

To operate the Telecab from the COP controls:

1 Insert the key into the key switch and turn it clockwise to the operating position. The key is in the operating position when it cannot be pulled out.

2 Apply constant pressure on the appropriate landing button to move the Telecab in the desired direction. Note the following:

- The Telecab will not move if the door is open.
- The Telecab will stop moving in the down direction if the underpan sensor detects an object underneath it.
- The Telecab will stop moving in the up direction if it reaches the floor plug and the floor plug sensor detects an object on it that weighs more than 20 lb (9.1 kg).

3 When the cab reaches the landing, the door will unlock automatically for a few seconds. You need to put a little pressure on the door in the closing direction in order to release the latch mechanism. If you need to re-open the door after the delay, turn the key on and press the call button again to unlock the door.

4 To prevent unauthorized use of the lift, take the key out when the unit is not in operation.

5 Pressing the Emergency Stop button during travel will stop the lift immediately and activate the alarm. The Emergency Stop overrides the landing station (hall call) controls. Pull the Emergency Stop out to return the lift to normal operation.

6 Pressing the Alarm button during travel will activate the alarm.

7 Pressing the Light button will turn on the cab lighting.

Operating from the Landing Station Controls

Figure 3 shows the different types of landing station (hall call) controls.

Figure 3

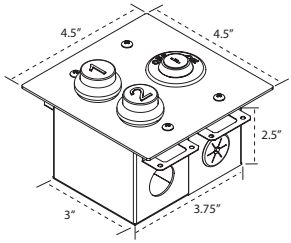

Flush mount

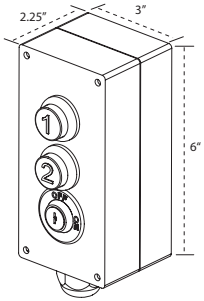

Surface mount

To operate the Telecab from the landing station (hall call) controls:

1 Insert the key into the key switch and turn it clockwise to the operating position. The key is in the operating position when it cannot be pulled out.

2 Apply constant pressure on the appropriate up/down button to move the Telecab in the desired direction. Note the following:

- The Telecab will not move if the door is open.
- The Telecab will stop moving in the down direction if the underpan sensor detects an object underneath it.
- The Telecab will stop moving in the up direction if it reaches the floor plug and the floor plug sensor detects an object on it that weighs more than 20 lb (9.1 kg).

3 When the cab reaches the landing, the door will unlock automatically for a few seconds. You need to put a little pressure on the door in the closing direction in order to release the latch mechanism. If you need to re-open the door after the delay, turn the key on and press the call button again to unlock the door.

4 To prevent unauthorized use of the lift, take the key out when the unit is not in operation.

4. SAFETY FEATURES

Safety Underpan and Floor Plug Sensors

The safety underpan (Figure 4) is located under the Telecab platform. The underpan has sensors that detect any obstacles and stop the downward travel of the lift.

The floor plug sensors (Figure 4) are located on top of the Telecab and will stop the upward travel of the elevator if an obstacle that weighs more than 20 lb (9.1 kg) is detected on the floor plug.

Figure 4

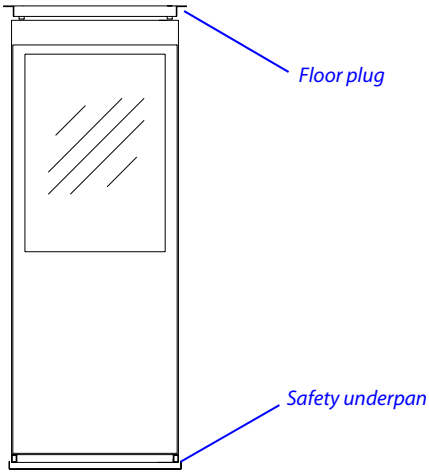

Door Lock and Open Door Sensor

The WR-500 lock keeps the cab door locked when the Telecab is operating or not at a landing.

The door open sensor prevents the Telecab from moving when the cab door is open.

Emergency Door Opening

The cab door can be opened using the emergency key provided (note that two identical emergency keys are provided).

To open the door in an emergency situation, insert the key into the hole of the WR-500 lock (Figure 5) and turn it.

Note that the key is for emergency use only and should be stored in a safe place.

Figure 5

Safety Brake

The safety brake stops the platform in the event of chain failure.

When the platform is in operation, the chain tension keeps the brake mechanism up (Figure 6) so that the brake's cam doesn't interfere with the tower track.

If a chain failure occurs, the brake mechanism comes down (Figure 6) and the brake cam stops the platform.

Figure 6

Safety brake in operating position

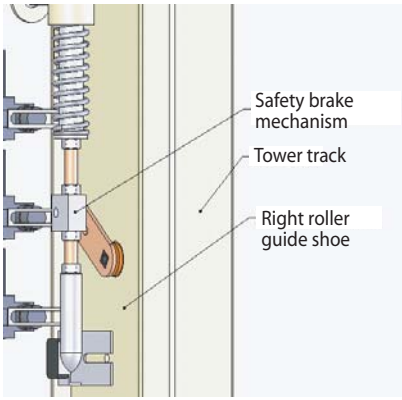

Safety brake in down position

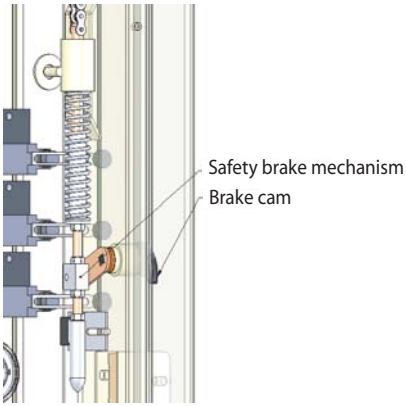

Emergency Stop Button

Pressing the red Emergency Stop button during travel will stop the elevator immediately and activate the alarm. The Emergency Stop overrides the landing stations (hall calls). Pull the Emergency Stop out to return the elevator to normal operation.

Manual Lowering and Battery Lowering System

If a power failure occurs, a battery lowering system will bring the Telecab to the bottom level. If the battery fails while operating, there is also a remote manual lowering device that you can use to lower the Telecab to the bottom level.

For units with a 120V AC pump, the manual lowering box (Figure 7) is located on the side of the Telecab. Pull on the steel cable located inside the manual lowering box to lower the Telecab to the bottom level.

Figure 7

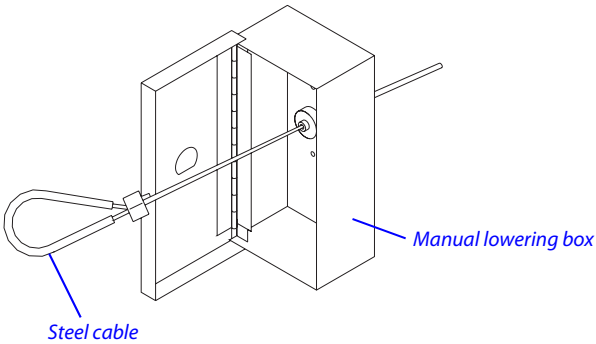

For units with a 12V DC pump, there is a key switch located on the side of the Telecab. Insert the same key used for call/send control into the key switch and turn it to the operating position. The cab will descend to the bottom level.

NOTE

This mechanism is for emergency use only.

5. MAINTENANCE

The owner can perform the 2-month inspections, but the 6-month inspections **must** be performed by a Qualified Technician. Contact your Authorized Dealer.

Maintenance Schedule

Verification by owner	**Frequency**
Verify general operation of the Telecab	Every 2 months
Verify operation of the safety devices: • Underpan sensors (safety switches) • Floor plug sensors (safety switches) • Door contact • Door lock • Emergency stop	Every 2 months
Verification by technician	Frequency
Verify operation of the emergency lowering system	Every 6 months
Verify operation of the safety brake	Every 6 months
Check the safety components: • Chains • Chain connecting links • Chain pulleys and shafts • Parts holding the chains on the roller supports • Chain tensioners on the rail (ensure they are tight) • Cylinder head (cotter pins, cracks, welds) • Hydraulic system (check for leaks) • Fastening devices (check for looseness) • Up relays – verify that one of the two up relays is not stuck in the activated position. Use a multimeter to verify that every normally-open contact is open when the relays are not being activated.	Every 6 months
Check the rollers	Every 6 months
Check for oil leaks	Every 6 months
Check the fluid level	Every 6 months
Check the battery fluid level (optional system)	Every 6 months

Maintenance Record

Date	Time	Reason for Call	Comments	Dealer

Operator Troubleshooting

The following table lists potential problems and their possible solutions.

If the problem persists, contact your Authorized Dealer.

Potential Problem	Possible Solution
Telecab goes up but does not come down.	Check the underpan sensor. Pull down on the underpan to ensure the pan is not stuck in the activated position.
Telecab comes down but does not go up.	Check the power supply (breaker, cord, battery, etc.). Check the floor plug switches. Lift the floor plug to ensure it is not stuck in the activated position.
Telecab does not move.	Check that the key is on. Check that the doors are closed. Check to see if the Emergency Stop is pushed in; it should be pulled out for normal operation. If the Telecab is at the bottom landing, check the floor plug switches as described above. If the Telecab is at the top landing, check the underpan sensor as described above.

Authorized Savaria Dealer

Telecab Residential Elevator
OWNER'S MANUAL

Part No. 000627
Copyright © 2011

Savaria Corporation
Elevators and Lifts
www.savaria.com

Sales
107 Alfred Kuehne Blvd.
Brampton, Ontario, L6T 4K3, Canada
Tel: (905) 791-5555
Fax: (905) 791-2222
Toll Free: 1-800-661-5112

savaria™